STOCK LIFTER

2478.10.

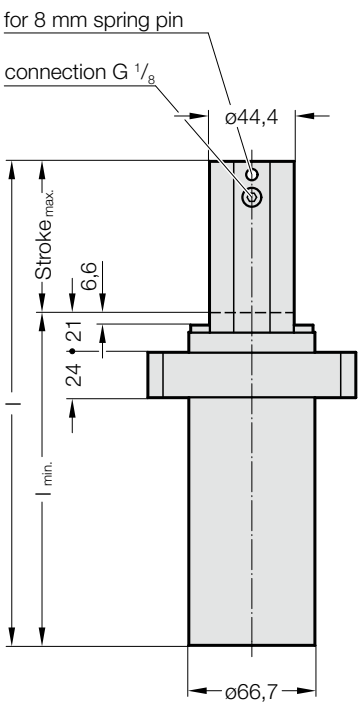

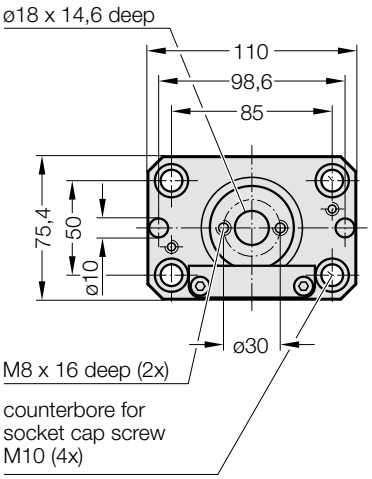

Description:

All component lifters in the various gas spring classes are of the same design and the different spring forces are achieved solely by means of different gas pressures.
The pressure can be topped up or reduced via the piston rod.

Note:

Pressure medium: Nitrogen - N_2
Max. filling pressure: 180 bar
Min. filling pressure: 25 bar
Working temperature: 0°C to +80°C
Temperature related force increase: ± 0,3%/°C
Max. recommended extensions per minute: approx. 80 to 100 (at 20°C)
Max. piston speed: 1,6 m/s
Order No for spare parts kit: 2478.10.00320
Spring forces as per spring diagram.
Upon customers request, also available unfilled, Order No 2478.10.00000....

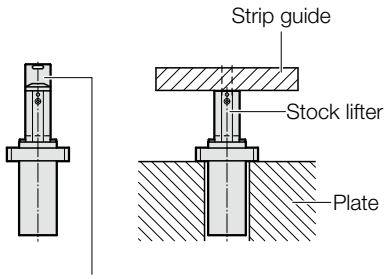

2478.10.00320.01 Fixing adapter order separately

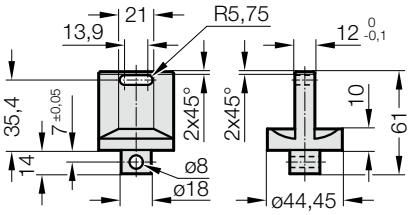

2478.10.

Stock lifter

Order No	Stroke$_{max.}$	$l_{min.}$	l
2478.10.□□□□□.025	25	121	146
2478.10.□□□□□.050	50	146	196
2478.10.□□□□□.080	80	176	256
2478.10.□□□□□.100	100	196	296
2478.10.□□□□□.125	125	221	346
2478.10.□□□□□.150	150	246	396
2478.10.□□□□□.163	163	259	422
2478.10.□□□□□.175	175	271	446
2478.10.□□□□□.200	200	296	496
2478.10.□□□□□.210	210	306	516

*complete with initial spring force
Spring force marking:
Initial spring force [daN] - Pressure [bar]
.00050. - 28
.00100. - 56
.00150. - 84
.00200. - 113
.00250. - 141
.00320. - 180

Initial spring force versus charge pressure

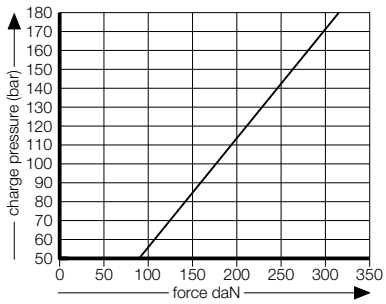

Spring force Diagram displacement versus stroke rise

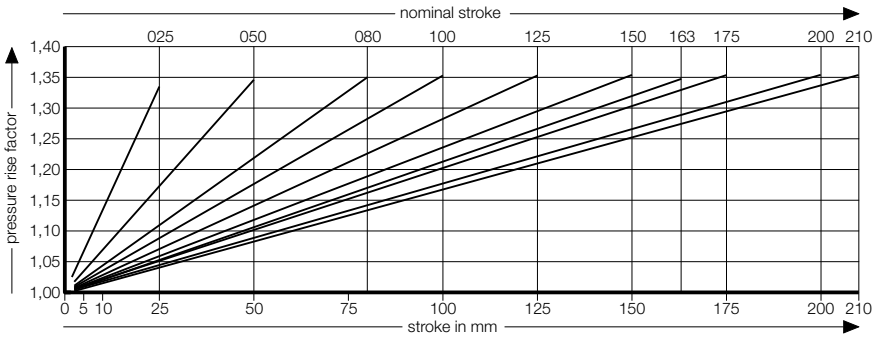

Pressure rise factor accounts for displacement but not external influences!

subject to alterations