CENTERING UNIT

2441.11.

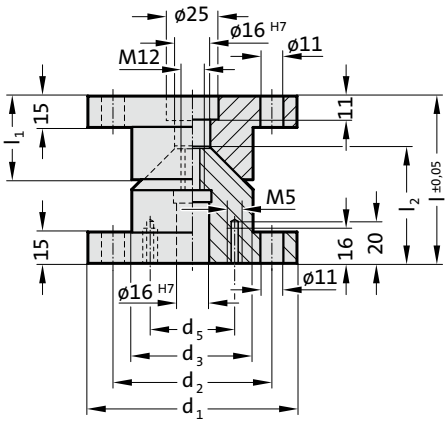

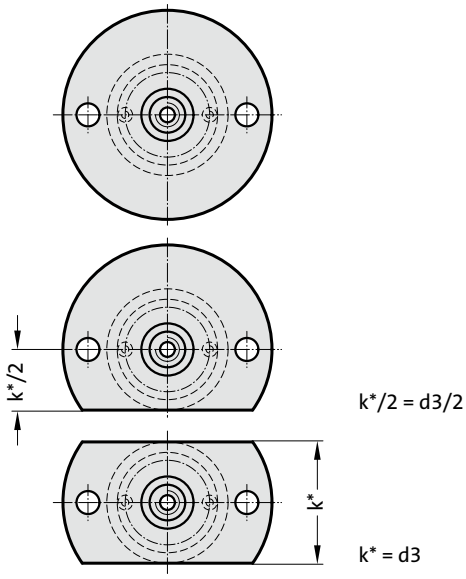

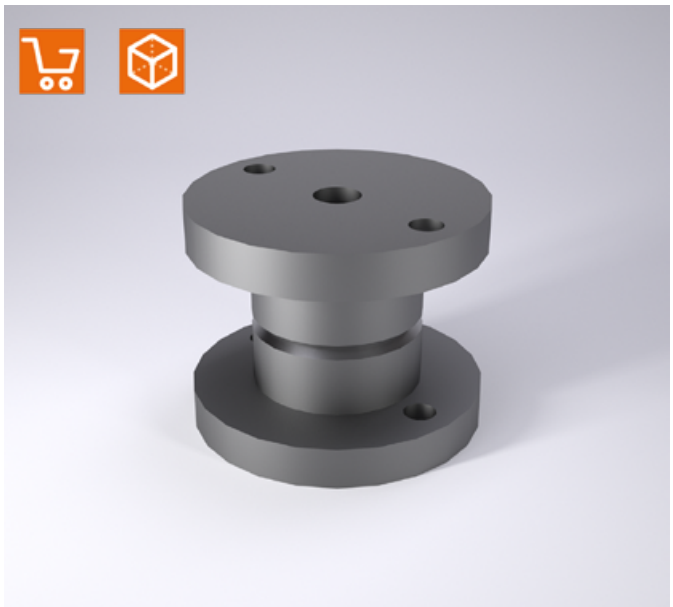

Material:
16MnCr5, heat treated
Conical surfaces induction hardened
Surface hardness: 60 + 4 HRC, Hardness penetration 1,0 + 0,5 mm

Note:
Adjusting washer 2441.11.3. to be ordered separately.
Screws are not included.

2441.11.□□□
Centring unit

2441.11.□□□.1
Centring unit with one flat side

2441.11.□□□.2
Centring unit with two flat sides

2441.11. Centering unit

Order No	d_1	d_2	d_3	d_5	l	l_1	l_2
2441.11.100	100	76	58	40.5	80	40	55
2441.11.100.1	100	76	58	40.5	80	40	55
2441.11.100.2	100	76	58	40.5	80	40	55
2441.11.120	120	96	78	50.5	90	50	65
2441.11.120.1	120	96	78	50.5	90	50	65
2441.11.120.2	120	96	78	50.5	90	50	65