GAS SPRING, SMALL DIMENSION AND LOW FORCE

Description:
Gas spring will be delivered unfilled and can only be used in a permanent connection (valveless).

Note:
Initial spring force at 180 bar = 200 daN

Order No for spare parts kit: 2480.21.00150

Pressure medium: Nitrogen - N_2
Max. filling pressure: 180 bar
Min. filling pressure: 25 bar
Working temperature: 0°C bis +80°C
Temerature related force increase: ± 0,3%/°C
Max. recommended extensions per minute: ca. 80 to 100 (at 20°C)
Max. piston speed: 1,6 m/s

Spring forces as per spring diagram.

2480.23.

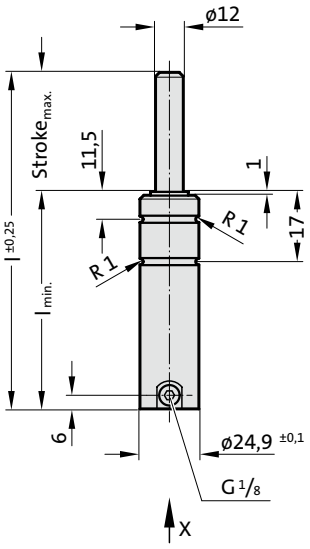

View X

APPROVED PED 2014/68/EU

S>max V>max P>max

2480.23.

Gas spring, small dimension and low force

Order No	Stroke max. (s)	l min.	l
2480.23.00000.010	10	52	62
2480.23.00000.013	12.7	54.7	67.4
2480.23.00000.016	16	58	74
2480.23.00000.025	25	67	92
2480.23.00000.038	38.1	80.1	118.2
2480.23.00000.050	50	92	142
2480.23.00000.063	63.5	108.5	172
2480.23.00000.080	80	125	205
2480.23.00000.100	100	145	245
2480.23.00000.125	125	170	295

Initial spring force
versus charge pressure

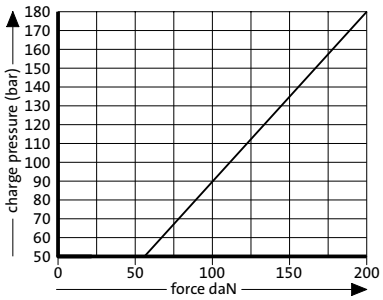

Spring force Diagram displacement versus stroke rise

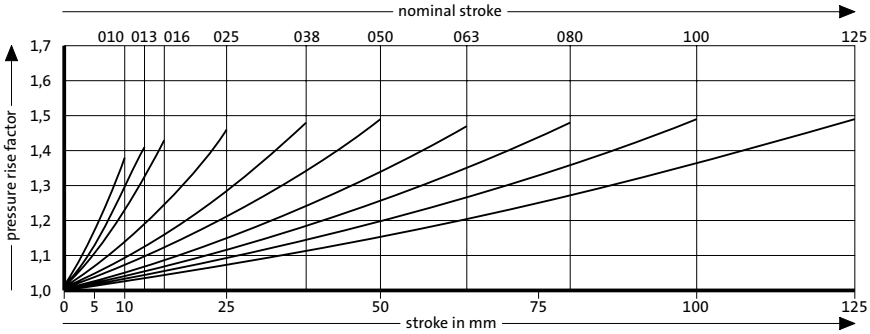

Pressure rise factor accounts for displacement but not external influences!