LCF GAS SPRING, DAMPED

Note:
Initial spring force F_{lcf} at 150 bar = 700 daN
Full spring force after 4.6 mm damped spring travel

Order No for spare parts kit: 2484.12.01500

Gas spring without valve
Order No (example): 2484.12.01500. .P

Pressure medium: Nitrogen N_2
Max. filling pressure: 150 bar
Min. filling pressure: 105 bar
Working temperature: 0°C to +80°C
Temperature related force increase: ± 0.3%/°C
Max. recommended extensions per minute: approx. 15 to 40 (at 20°C)
Max. piston speed: 1.6 m/s

2484.12.01500.

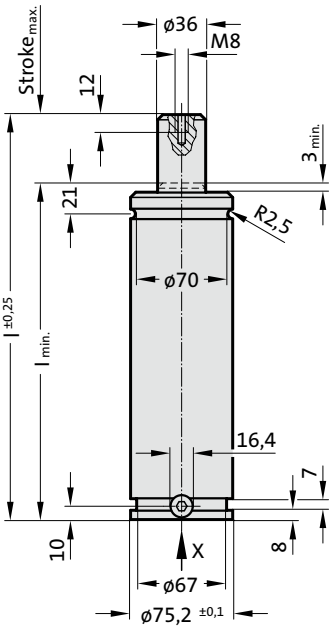

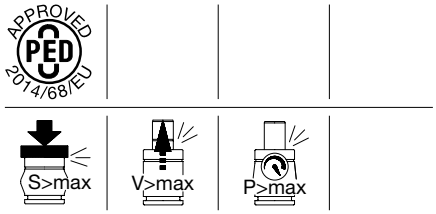

View X - Gas spring

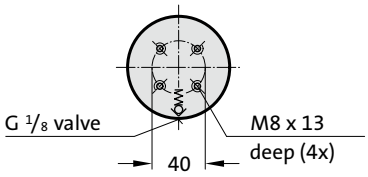

2484.12.01500.

LCF Gas Spring, damped

Order No	Stroke$_{max.}$ (s)	$l_{min.}$	l
2484.12.01500.025	25	135	160
2484.12.01500.038	38.1	148.1	186.2
2484.12.01500.050	50	160	210
2484.12.01500.063	63.5	173.5	237
2484.12.01500.080	80	190	270
2484.12.01500.100	100	210	310
2484.12.01500.125	125	235	360
2484.12.01500.160	160	270	430
2484.12.01500.200	200	310	510
2484.12.01500.250	250	360	610
2484.12.01500.300	300	410	710

Initial spring force
versus charge pressure

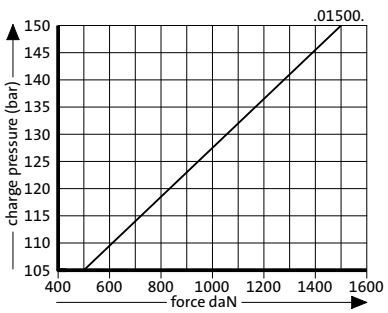

Spring force Diagram displacement versus stroke rise

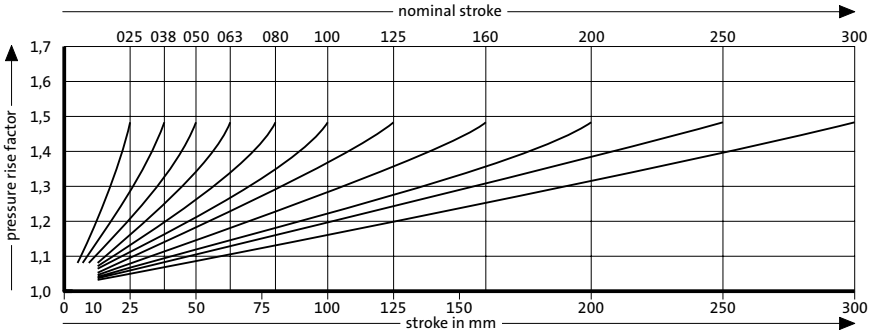

Pressure rise factor accounts for displacement but not external influences!