LCF GAS SPRING, DAMPED

Note:
Initial spring force F_{lcf} at 150 bar = 470 daN
Full spring force after 3.1 mm damped spring travel

Order No for spare parts kit: 2484.13.00750

Gas spring without valve
Order No (example): 2484.13.00750. .P

Pressure medium: Nitrogen N_2
Max. filling pressure: 150 bar
Min. filling pressure: 70 bar
Working temperature: 0°C to +80°C
Temperature related force increase: ± 0.3%/°C
Max. recommended extensions per minute: approx. 15 to 40 (at 20°C)
Max. piston speed: 1.6 m/s

2484.13.00750.

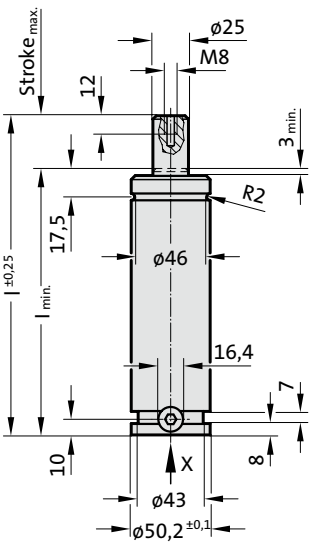

APPROVED PED 2014/68/EU

S>max | V>max | P>max

2484.13.00750.

LCF Gas Spring, damped

View X - Gas spring

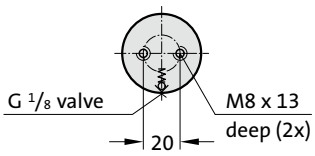

Order No	Stroke$_{max.}$ (s)	$l_{min.}$	l
2484.13.00750.013	12.7	107.7	120.4
2484.13.00750.025	25	120	145
2484.13.00750.038	38.1	133.1	171.2
2484.13.00750.050	50	145	195
2484.13.00750.063	63.5	158.5	222
2484.13.00750.080	80	175	255
2484.13.00750.100	100	195	295
2484.13.00750.125	125	220	345
2484.13.00750.160	160	255	415
2484.13.00750.200	200	295	495
2484.13.00750.250	250	345	595
2484.13.00750.300	300	395	695

Initial spring force
versus charge pressure

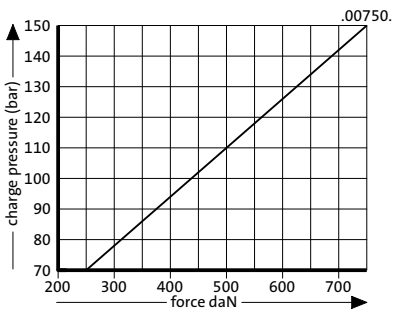

Spring force Diagram displacement versus stroke rise

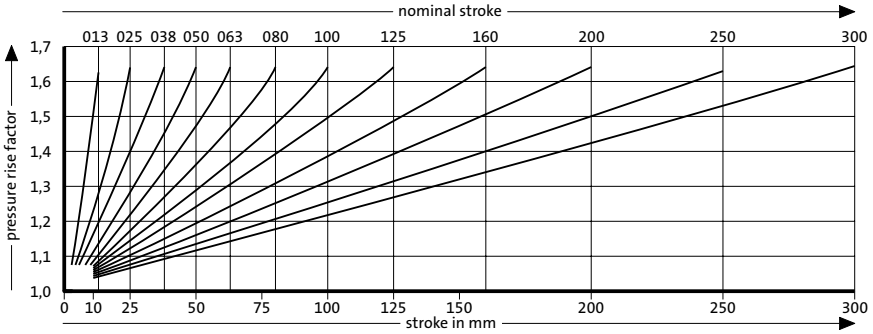

Pressure rise factor accounts for displacement but not external influences!