GAS SPRING SPEED CONTROL, CUSHIONED

Note:
Initial spring force at 150 bar = 3000 daN

Order No for spare parts kit: 2486.12.03000

Pressure medium: Nitrogen N_2
Max. filling pressure: 150 bar
Min. filling pressure: 25 bar
Working temperature: 0°C to +80°C
Temperature related force increase: ± 0.3%/°C
Max. recommended extensions per minute:
approx. 10 to 13 (at 20°C)
Dampening length: ~ 30 mm
Piston rod speed, decelerated: 0.4 m/s

2486.12.03000.

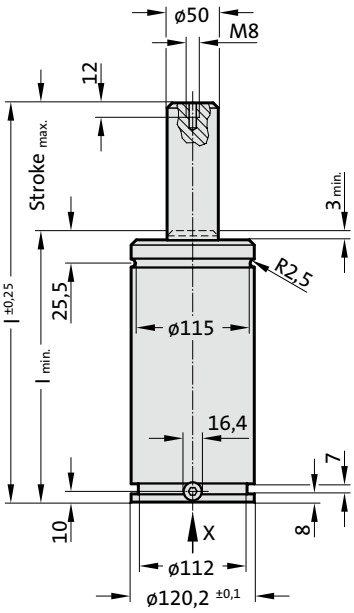

View X - Gas spring

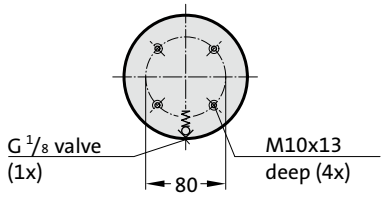

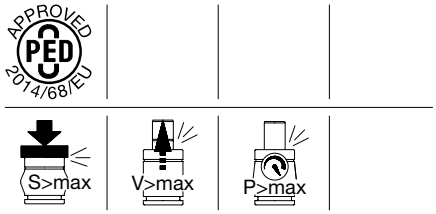

2486.12.03000.

Gas spring SPEED CONTROL, cushioned

Order No	Stroke$_{max.}$ (s)	$l_{min.}$	l
2486.12.03000.125	125	265	390
2486.12.03000.160	160	300	460
2486.12.03000.200	200	340	540
2486.12.03000.250	250	390	640
2486.12.03000.300	300	440	740

Initial spring force
versus charge pressure

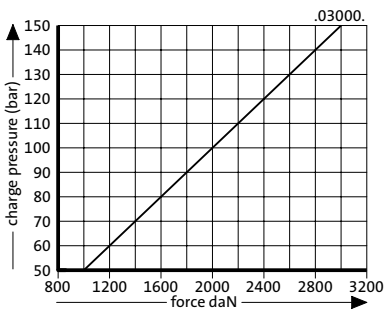

Spring force Diagram displacement versus stroke rise

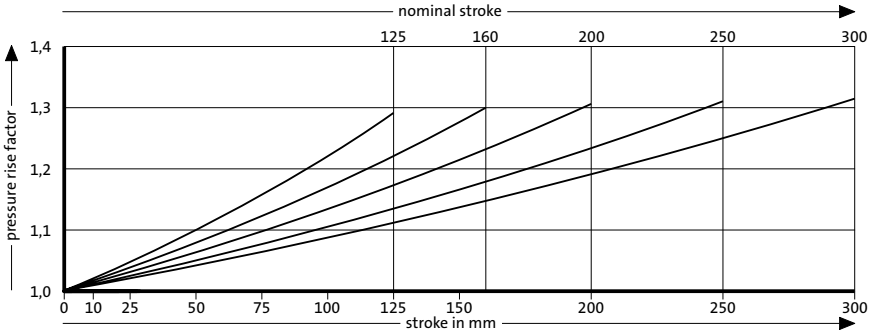

Pressure rise factor accounts for displacement but not external influences!