GAS SPRING POWERLINE

Note:
Initial spring force at 150 bar = 6630 daN

Order No for spare parts kit: 2487.12.06600

Gas spring without valve
Order No (example): 2487.12.06600. .P

Pressure medium: Nitrogen N_2
Max. filling pressure: 150 bar
Min. filling pressure: 25 bar
Working temperature: 0°C to +80°C
Temperature related force increase: ± 0.3%/°C
Max. recommended extensions per minute:
approx. 20 to 100 (at 20°C)
Max. piston speed: 1.6 m/s

2487.12.06600.

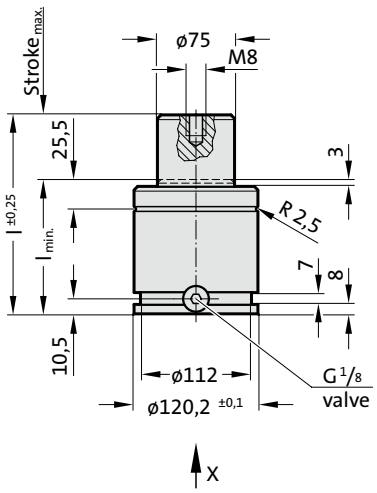

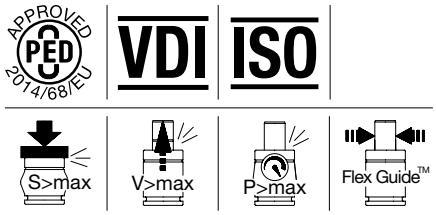

View X

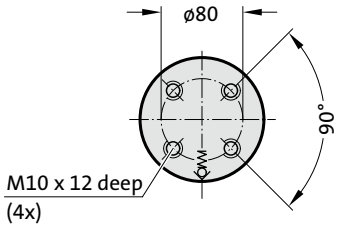

2487.12.06600.

Gas spring POWERLINE

Order No	Stroke$_{max.}$ (s)	$l_{min.}$	l
2487.12.06600.016	16	84	100
2487.12.06600.019	19	87	106
2487.12.06600.025	25	93	118
2487.12.06600.032	32	100	132
2487.12.06600.038	38	106	144
2487.12.06600.050	50	118	168
2487.12.06600.063	63	131	194
2487.12.06600.075	75	143	218
2487.12.06600.080	80	148	228
2487.12.06600.100	100	168	268
2487.12.06600.125	125	193	318

Initial spring force
versus charge pressure

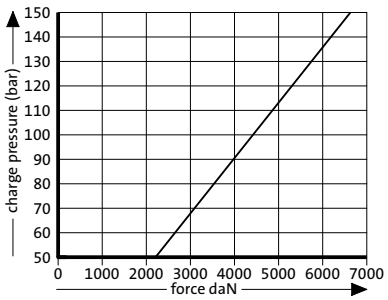

Spring force Diagram displacement versus stroke rise

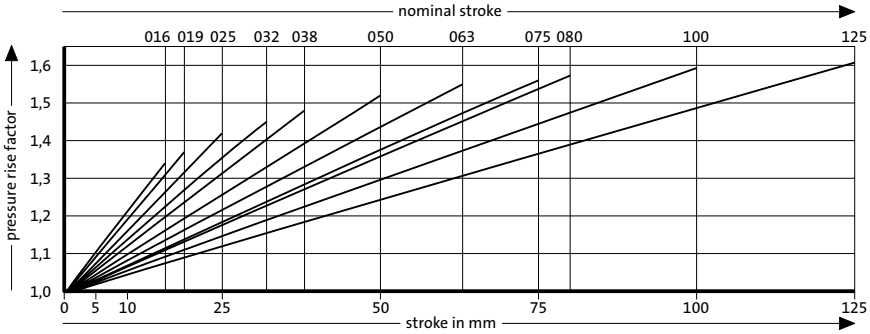

Pressure rise factor accounts for displacement but not external influences!