GAS SPRING POWERLINE WITH REINFORCED SPRING BASE

Note:
Initial spring force at 150 bar = 470 daN

Order No for spare parts kit: 2487.12.00500

Pressure medium: Nitrogen N_2
Max. filling pressure: 150 bar
Min. filling pressure: 25 bar
Working temperature: 0°C to +80°C
Temperature related force increase: ± 0.3%/°C
Max. recommended extensions per minute:
approx. 20 to 100 (at 20°C)
Max. piston speed: 1.6 m/s

2487.12.33.00500.

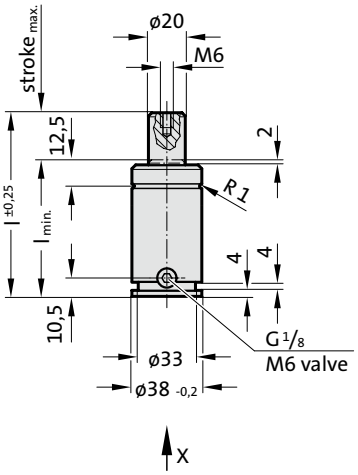

APPROVED PED 2014/68/EU

S>max | V>max | P>max | Flex Guide™

View X

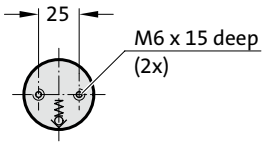

2487.12.33.00500.

Gas spring POWERLINE with reinforced spring base

Order No	Stroke$_{max.}$ (s)	$l_{min.}$	l
2487.12.33.00500.010	10	50	60
2487.12.33.00500.013	13	53	66
2487.12.33.00500.016	16	56	72
2487.12.33.00500.019	19	59	78
2487.12.33.00500.025	25	65	90
2487.12.33.00500.032	32	72	104
2487.12.33.00500.038	38	78	116
2487.12.33.00500.050	50	90	140
2487.12.33.00500.063	63	103	166
2487.12.33.00500.075	75	115	190
2487.12.33.00500.080	80	120	200
2487.12.33.00500.100	100	140	240
2487.12.33.00500.125	125	165	290

Initial spring force
versus charge pressure

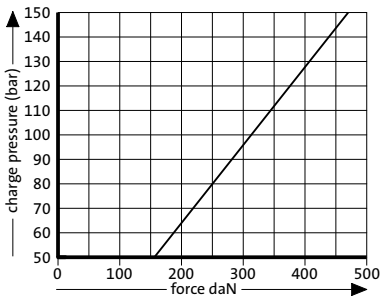

Spring force Diagram displacement versus stroke rise

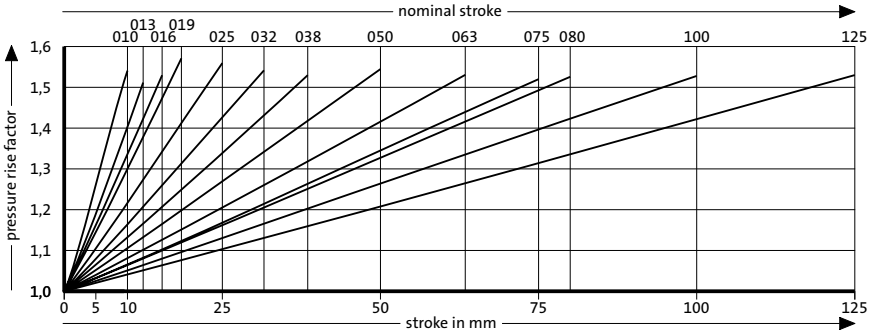

Pressure rise factor accounts for displacement but not external influences!