GAS SPRING POWERLINE WITH REINFORCED SPRING BASE

Note:
Initial spring force at 150 bar = 750 daN

Order No for spare parts kit: 2487.12.00750

Pressure medium: Nitrogen N_2
Max. filling pressure: 150 bar
Min. filling pressure: 25 bar
Working temperature: 0°C to +80°C
Temperature related force increase: ± 0.3%/°C
Max. recommended extensions per minute:
approx. 20 to 100 (at 20°C)
Max. piston speed: 1.6 m/s

2487.12.33.00750.

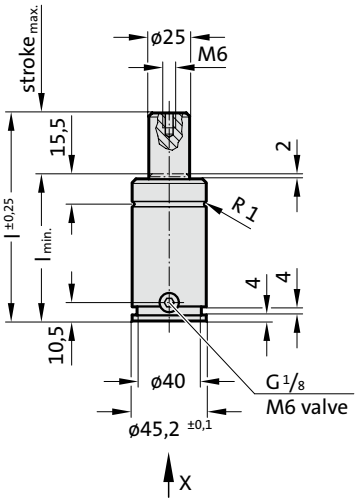

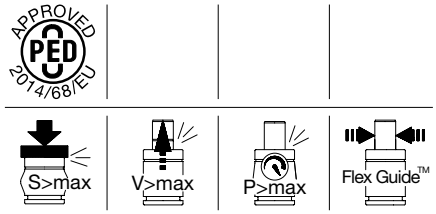

View X

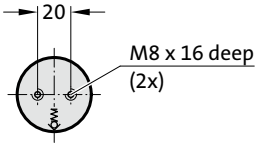

2487.12.33.00750.

Gas spring POWERLINE with reinforced spring base

Order No	Stroke$_{max.}$ (s)	$l_{min.}$	l
2487.12.33.00750.010	10	57	67
2487.12.33.00750.013	13	60	73
2487.12.33.00750.016	16	63	79
2487.12.33.00750.019	19	66	85
2487.12.33.00750.025	25	72	97
2487.12.33.00750.032	32	79	111
2487.12.33.00750.038	38	85	123
2487.12.33.00750.050	50	97	147
2487.12.33.00750.063	63	110	173
2487.12.33.00750.075	75	122	197
2487.12.33.00750.080	80	127	207
2487.12.33.00750.100	100	147	247
2487.12.33.00750.125	125	172	297

Initial spring force
versus charge pressure

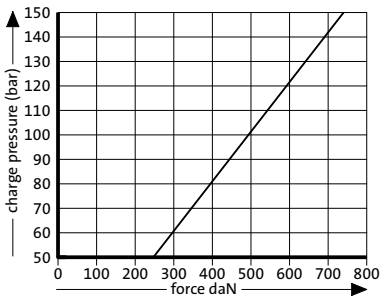

Spring force Diagram displacement versus stroke rise

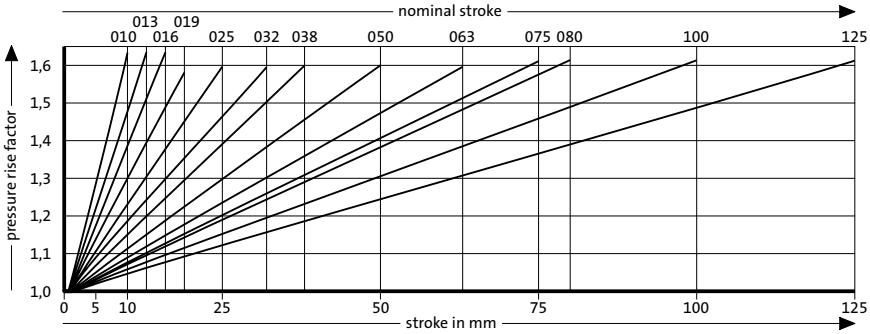

Pressure rise factor accounts for displacement but not external influences!