GAS SPRING POWERLINE WITH REINFORCED SPRING BASE

Note:
Initial spring force at 150 bar = 2400 daN

Order No for spare parts kit: 2487.12.02400

Pressure medium: Nitrogen N_2
Max. filling pressure: 150 bar
Min. filling pressure: 25 bar
Working temperature: 0°C to +80°C
Temperature related force increase: ± 0.3%/°C
Max. recommended extensions per minute:
approx. 20 to 100 (at 20°C)
Max. piston speed: 1.6 m/s

2487.12.33.02400.

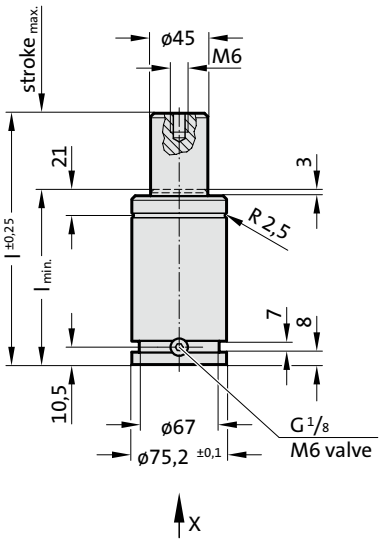

APPROVED PED 2014/68/EU

S>max | V>max | P>max | Flex Guide™

View X

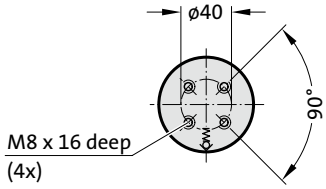

2487.12.33.02400.

Gas spring POWERLINE with reinforced spring base

Order No	Stroke$_{max.}$ (s)	$l_{min.}$	l
2487.12.33.02400.016	16	75	91
2487.12.33.02400.019	19	79	98
2487.12.33.02400.025	25	84	109
2487.12.33.02400.032	32	91	123
2487.12.33.02400.038	38	97	135
2487.12.33.02400.050	50	109	159
2487.12.33.02400.063	63	122	185
2487.12.33.02400.075	75	134	209
2487.12.33.02400.080	80	139	219
2487.12.33.02400.100	100	159	259
2487.12.33.02400.125	125	184	309

Initial spring force
versus charge pressure

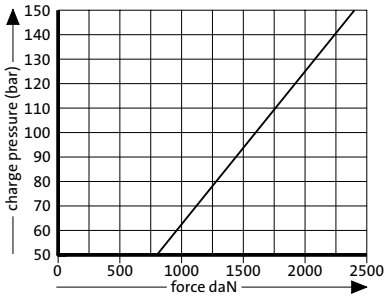

Spring force Diagram displacement versus stroke rise

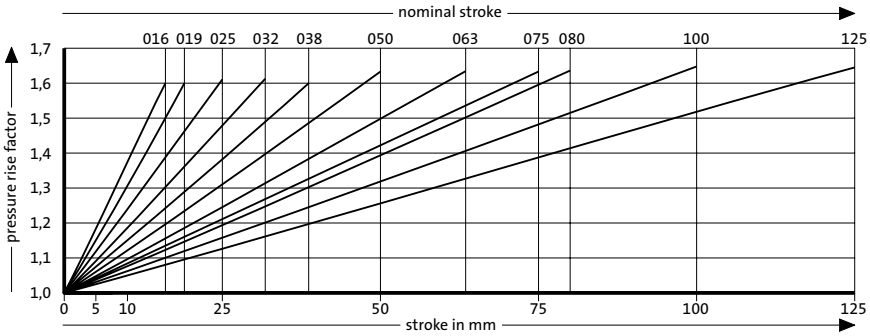

Pressure rise factor accounts for displacement but not external influences!