GAS SPRING HEAVY DUTY

Note:
Initial spring force at 150 bar = 740 daN

Order No for spare parts kit: 2488.13.00750

Gas spring without valve
Order No (example): 2488.13.00750. .P

Pressure medium: Nitrogen N_2
Max. filling pressure: 150 bar
Min. filling pressure: 25 bar
Working temperature: 0°C to +80°C
Temperature related force increase: ± 0.3%/°C
Max. recommended extensions per minute:
approx. 15 to 100 (at 20°C)
Max. piston speed: 1.6 m/s

2488.13.00750.

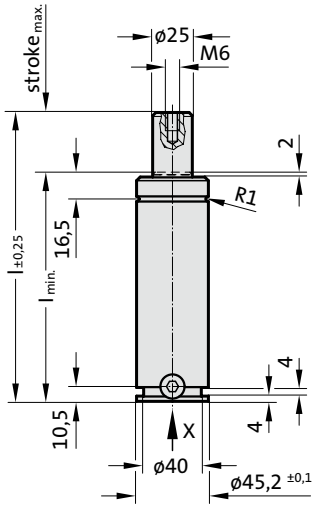

View X

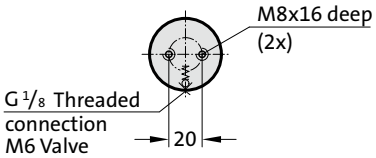

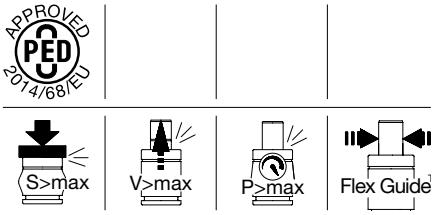

2488.13.00750.

Gas spring HEAVY DUTY

Order No	Stroke$_{max.}$ (s)	$l_{min.}$	l
2488.13.00750.013	13	98	111
2488.13.00750.025	25	110	135
2488.13.00750.038	38	123	161
2488.13.00750.050	50	135	185
2488.13.00750.063	63	148	211
2488.13.00750.075	75	160	235
2488.13.00750.080	80	165	245
2488.13.00750.100.	100	185	285
2488.13.00750.125.	125	210	335
2488.13.00750.150.	150	235	385
2488.13.00750.160.	160	245	405
2488.13.00750.175.	175	260	435
2488.13.00750.200.	200	285	485

Initial spring force
versus charge pressure

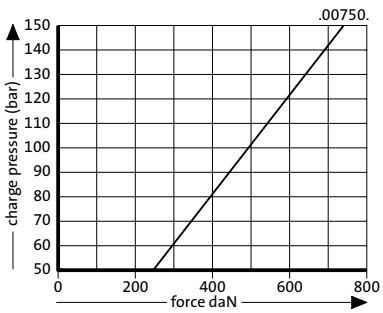

Spring force Diagram displacement versus stroke rise

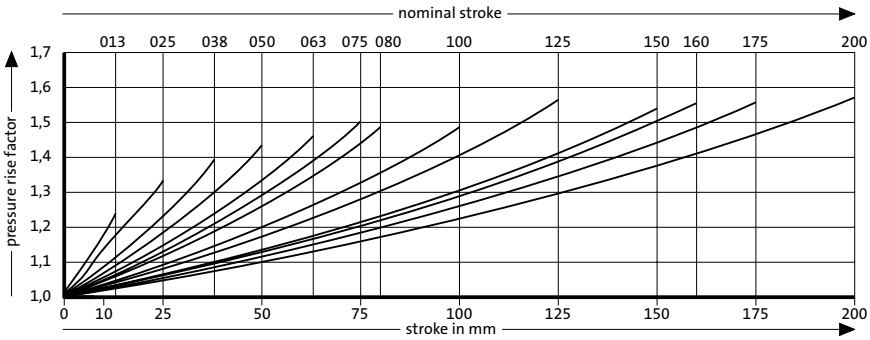

Pressure rise factor accounts for displacement but not external influences!