GAS SPRING HEAVY DUTY

Note:
Initial spring force at 150 bar = 920 daN

Order No for spare parts kit: 2488.13.01000

Gas spring without valve
Order No (example): 2488.13.01000. .P

Pressure medium: Nitrogen N_2
Max. filling pressure: 150 bar
Min. filling pressure: 25 bar
Working temperature: 0°C to +80°C
Temperature related force increase: ± 0.3%/°C
Max. recommended extensions per minute:
approx. 15 to 100 (at 20°C)
Max. piston speed: 1.6 m/s

2488.13.01000.

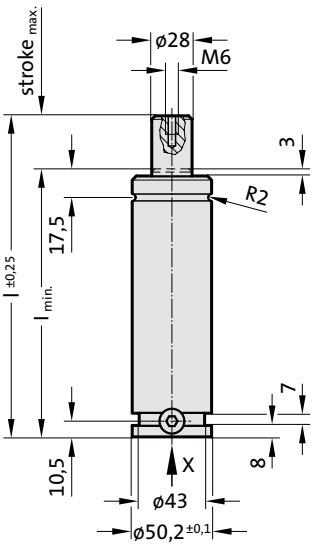

View X

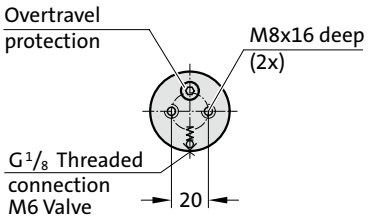

APPROVED PED 2014/68/EU | VDI | ISO

S>max | V>max | P>max | Flex Guide™

2488.13.01000.

Gas spring HEAVY DUTY

Order No	Stroke$_{max.}$ (s)	$l_{min.}$	l
2488.13.01000.013	13	108	121
2488.13.01000.025	25	120	145
2488.13.01000.038	38	133	171
2488.13.01000.050	50	145	195
2488.13.01000.063	63	158	221
2488.13.01000.075	75	170	245
2488.13.01000.080	80	175	255
2488.13.01000.100	100	195	295
2488.13.01000.125	125	220	345
2488.13.01000.150	150	245	395
2488.13.01000.160	160	255	415
2488.13.01000.175	175	270	445
2488.13.01000.200	200	295	495
2488.13.01000.250	250	345	595
2488.13.01000.300	300	395	695

Initial spring force
versus charge pressure

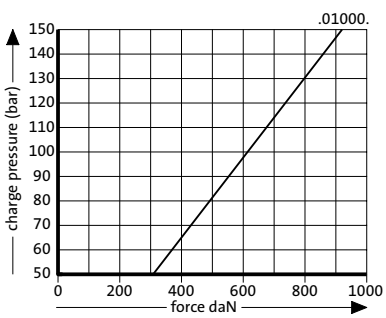

Spring force Diagram displacement versus stroke rise

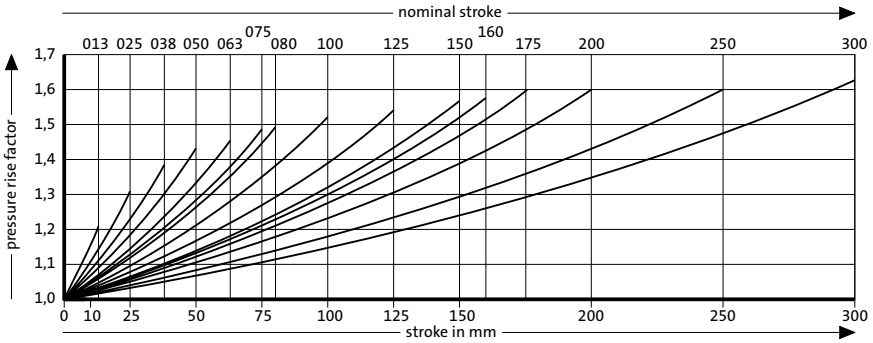

Pressure rise factor accounts for displacement but not external influences!