GAS SPRING CX, COMPACT XTREME

Note:
Initial spring force at 200 bar = 1900 daN

Order No for spare parts kit: 2497.12.01900

For stroke lengths over 25 mm, the gas pressure springs in the tool should be attached to the base through the threaded holes.
When mounting to floor, contact over the entire floor of the cylinder tube must beensured!
Before fitting the adapter base plate remove the valve from the gas spring.
If vibration occurs, tighten the fixing screws accordingly.

Pressure medium: Nitrogen N_2
Max. filling pressure: 200 bar
Min. filling pressure: 25 bar
Working temperature: 0°C to +80°C
Temperature related force increase: ± 0.3%/°C
Max. recommended extensions per minute: approx. 50 to 130 (at 20°C)
Max. piston speed: 1.6 m/s

2497.12.01900.

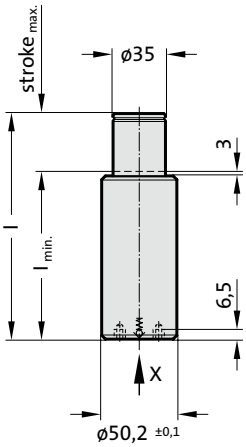

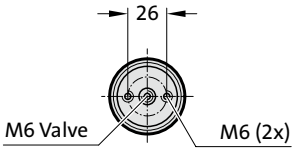

View X

APPROVED PED 2014/68/EU

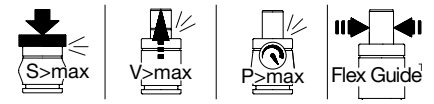

2497.12.01900.

Gas spring CX, Compact Xtreme

Order No	Stroke$_{max.}$ (s)	$l_{min.}$	l
2497.12.01900.010	10	70	80
2497.12.01900.015	15	80	95
2497.12.01900.025	25	90	115
2497.12.01900.038	38	112	150
2497.12.01900.050	50	125	175
2497.12.01900.063	63	142	205
2497.12.01900.080	80	165	245

2497.00.20.01900

Adapter baseplate with connecting fitting, with valve

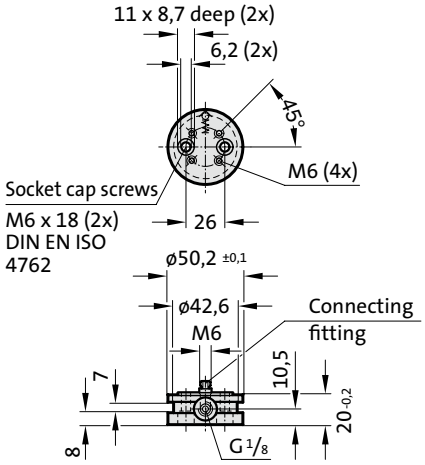

Initial spring force versus charge pressure

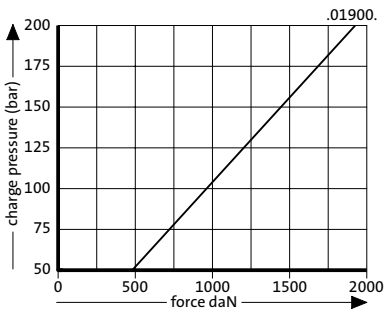

Spring force Diagram displacement versus stroke rise

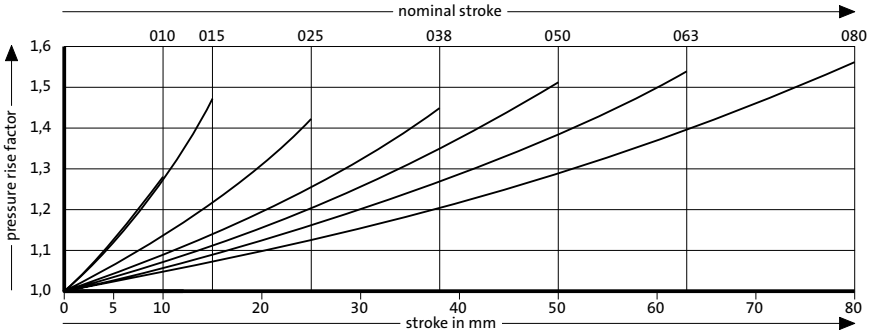

Pressure rise factor accounts for displacement but not external influences!