GAS SPRING HEAVY DUTY

Note:
Initial spring force at 150 bar = 2400 daN

Order No for spare parts kit: 2488.13.02400

Gas spring without valve
Order No (example): 2488.13.02400. .P

Pressure medium: Nitrogen N_2
Max. filling pressure: 150 bar
Min. filling pressure: 25 bar
Working temperature: 0°C to +80°C
Temperature related force increase: ± 0.3%/°C
Max. recommended extensions per minute:
approx. 15 to 100 (at 20°C)
Max. piston speed: 1.6 m/s

2488.13.02400.

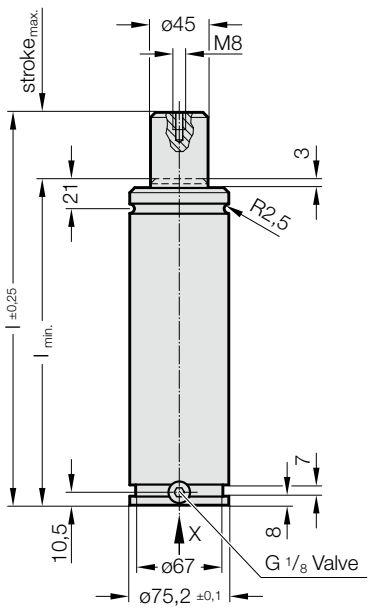

View X

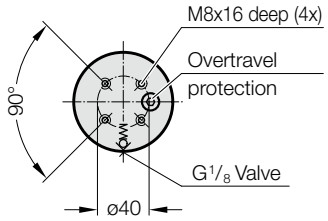

APPROVED PED 2014/68/EU | VDI | ISO

S>max | V>max | P>max | Flex Guide™

2488.13.02400.

Gas spring HEAVY DUTY

Order No	Stroke$_{max.}$ (s)	$l_{min.}$	l
2488.13.02400.025	25	135	160
2488.13.02400.038	38	148	186
2488.13.02400.050	50	160	210
2488.13.02400.063	63	173	236
2488.13.02400.075	75	185	260
2488.13.02400.080	80	190	270
2488.13.02400.100	100	210	310
2488.13.02400.125	125	235	360
2488.13.02400.150	150	260	410
2488.13.02400.160	160	270	430
2488.13.02400.175	175	285	460
2488.13.02400.200	200	310	510
2488.13.02400.250	250	360	610
2488.13.02400.300	300	410	710

Initial spring force
versus charge pressure

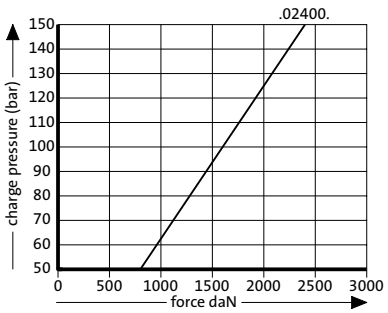

Spring force Diagram displacement versus stroke rise

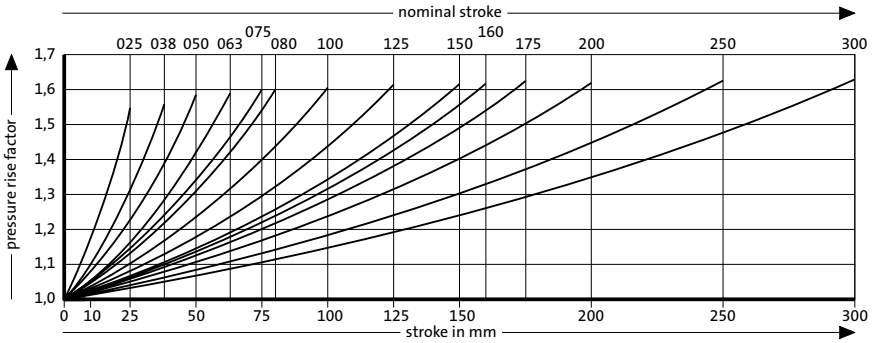

Pressure rise factor accounts for displacement but not external influences!