COMPACT GAS SPRING

Note:
Initial spring force at 150 bar = 3000 daN

Order No for spare parts kit: 2490.14.03000

Gas spring without valve
Order No (example): 2490.14.03000. .P

When mounting to floor, contact over the entire floor of the cylinder tube must beensured!
Before fitting the adapter base plate remove the valve from the gas spring.
If vibration occurs, tighten the fixing screws accordingly.

Pressure medium: Nitrogen N_2
Max. filling pressure: 150 bar
Min. filling pressure: 25 bar
Working temperature: 0°C to +80°C
Temperature related force increase: ± 0.3%/°C
Max. recommended extensions per minute: approx. 80 to 100 (at 20°C)
Max. piston speed: 0.8 m/s

2490.14.03000.

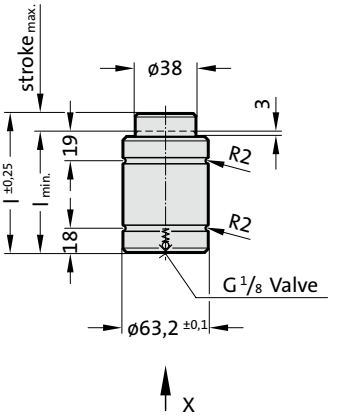

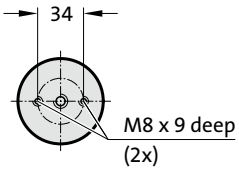

View X

APPROVED PED 2014/68/EU

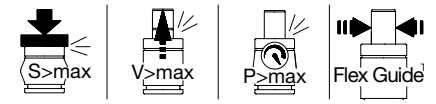

2490.14.03000.

Compact gas spring

Order No	Stroke$_{max.}$ (s)	$l_{min.}$	l	g_2*
2490.14.03000.010	10	75	85	65
2490.14.03000.016	16	87	103	77
2490.14.03000.025	25	105	130	95
2490.14.03000.032	32	118	150	108
2490.14.03000.040	40	135	175	125
2490.14.03000.050	50	155	205	145
2490.14.03000.065	65	191	256	181

*see mounting example

2480.00.20.03000

Adapter baseplate with connecting fitting, without valve (only for use with composite connections)

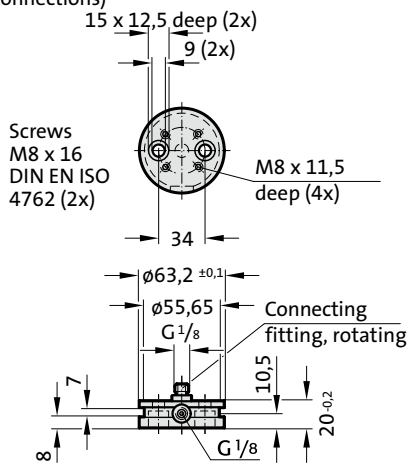

Initial spring force versus charge pressure

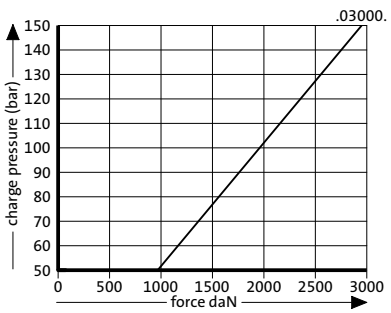

Spring force Diagram displacement versus stroke rise

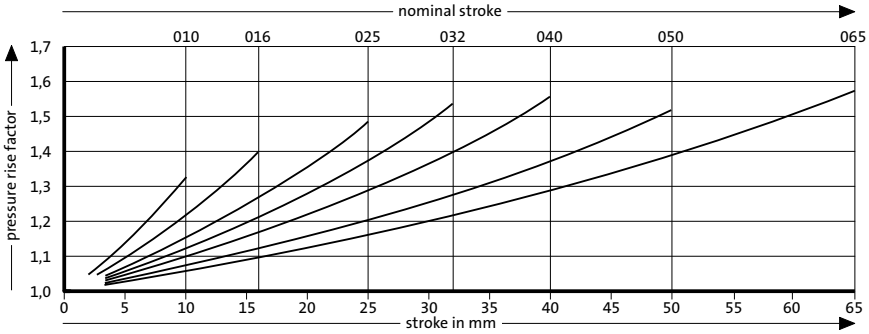

Pressure rise factor accounts for displacement but not external influences!