SINGLE-SIDED PRISMATIC SLIDING BLOCK, STEEL, CNOMO

2965.82.45.

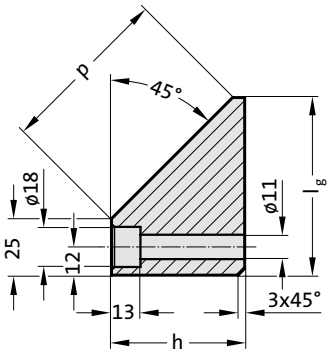

A

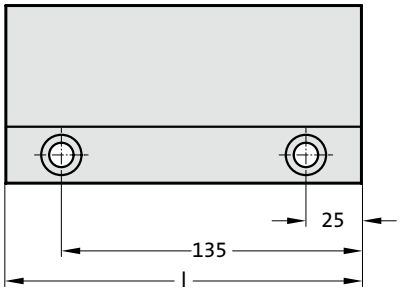

B

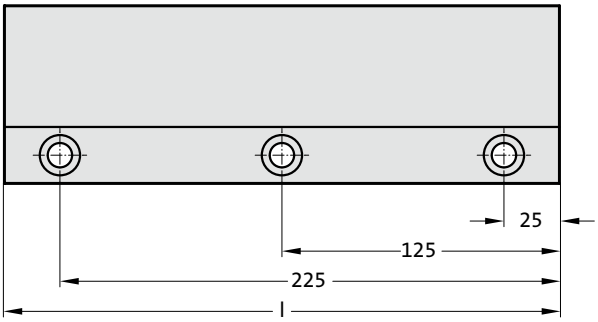

Material:
Steel, sliding faces surface hardened

Note:
Matching single-sided prismatic guides 2965.80.45.
Screws and pins are not included.

Fixing:
Use socket cap screws DIN EN ISO 4762 M10.

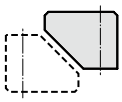

2965.82.45. Single-sided prismatic sliding block, Steel, CNOMO

Order No	Shape	l_g	h	l	p	Number of screw holes
2965.82.45.060.045.160	A	60	45	160	50	2
2965.82.45.060.045.250	B	60	45	250	50	3
2965.82.45.080.060.160	A	80	60	160	80	2
2965.82.45.080.060.250	B	80	60	250	80	3